Standard Accessible Ramp Detail

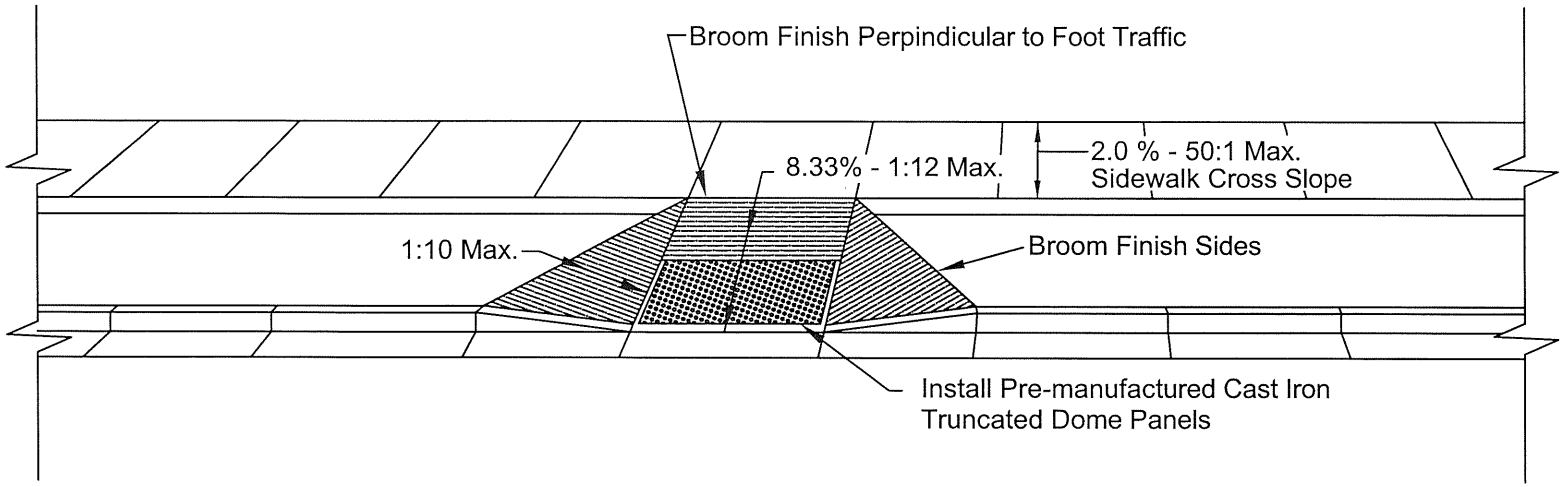

NOTES:

1. All ramps installed shall meet current A.D.A. standards and specifications.
2. Ramp design and location may vary and flared sides are not required for all applications.
3. Longitudinal slope of all ramps shall not exceed 1:12 or 8.33%.
4. Use INDOT class "A" concrete at a minimum depth of 6".
5. Install a pre-manufactured cast iron truncated dome panel, within the first 2'-0" of the ramp, across the entire opening. Ramps that are designed in a radius shall have panels custom made to fit the specified radius.